USER'S GUIDE
TPL DRIVE RGB

INTRODUCTION

This note contains all the instructions and precautions for a safe set up and an optimal use of the product.
Warning: we are not responsible if any of these items below would not be respected and in this case, the TPL Vision's warranty shall not apply anymore to this product.

SAFETY AND OPERATING INFORMATION

Class III light
IP 20 Product
Operating temperature 0°C à 40°C
Power supply 24VDC+/- 10%, if this is not respected, you may damage the product and/or the user may be electrocuted
Observe the power supply voltages and terminal plug in
Do not modify the product even partially
Do not clean while operating
Do not cover with a heat insulation or do not lock in a sealed area
Do not stare into the beam and follow the instructions below:

- If possible set up a filter to block the product's light radiation between the lighting product and the surrounding worker
- When the implementation of a filter is not possible, provide glasses or an adequate protection mask to workers in order to block the light radiation
- Forbid or limit as possible direct access to the light source (exposure in the axis of radiation)
- Point out a security area to prevent workers from getting too close to the light; please follow the NZOR (Nominal Zone of Optical Risk) recomandations given by TPL Vision (upon demand)In any case, ensure that workers around the product are properly protected toward exposure

PACKAGING / SHIPPING / RECEPTION

The product is packaged in our factory using appropriate boxes and packages. They are made to avoid any damages by means of regular transportation.
However a damaged parcel should be reported to the carrier upon receipt and stated officially at its reception (as a "reserve"). Then, please report by writing to TPL VISION as soon as possible. (at least within 24 hours after the package reception). Any package damaged during transportation will not be taken back or replaced if it has not been reported on the travel voucher and to TPL VISION on time.
When you open the bag containing the product, any cutting blade should be avoided so as not to damage the product.

All accessories included in the package must be used if necessary (do not use other products or equivalent to replace the accessories supplied).

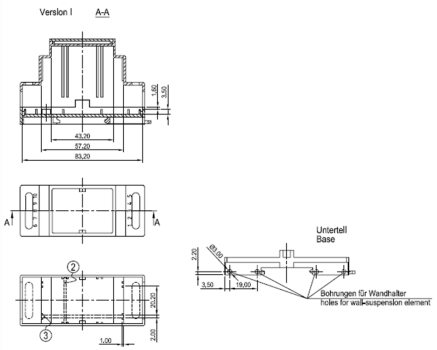

SET UP PROCEDURE

Lighting shall not be settled while the product is powered on.

For the screws selection (not included) respect the following indications :
Recommended torque: 0.5 to 1.5 Nm (Using LOCTITE 243 (not supplied) is recommended)

20, rue de St Philbert • 44118 LA CHEVROLIÈRE
Tél. 02 40 56 10 99 • Fax 02 40 56 42 89
www.tpl-vision.net

RevA – Copyright TPL Vision ©

ELECTRICAL WIRING

1– Turn off overall system 24 VDC power supply
2– Make all connections (power off) regarding diagram below:

CLEANING (PRODUCT TURNED OFF):
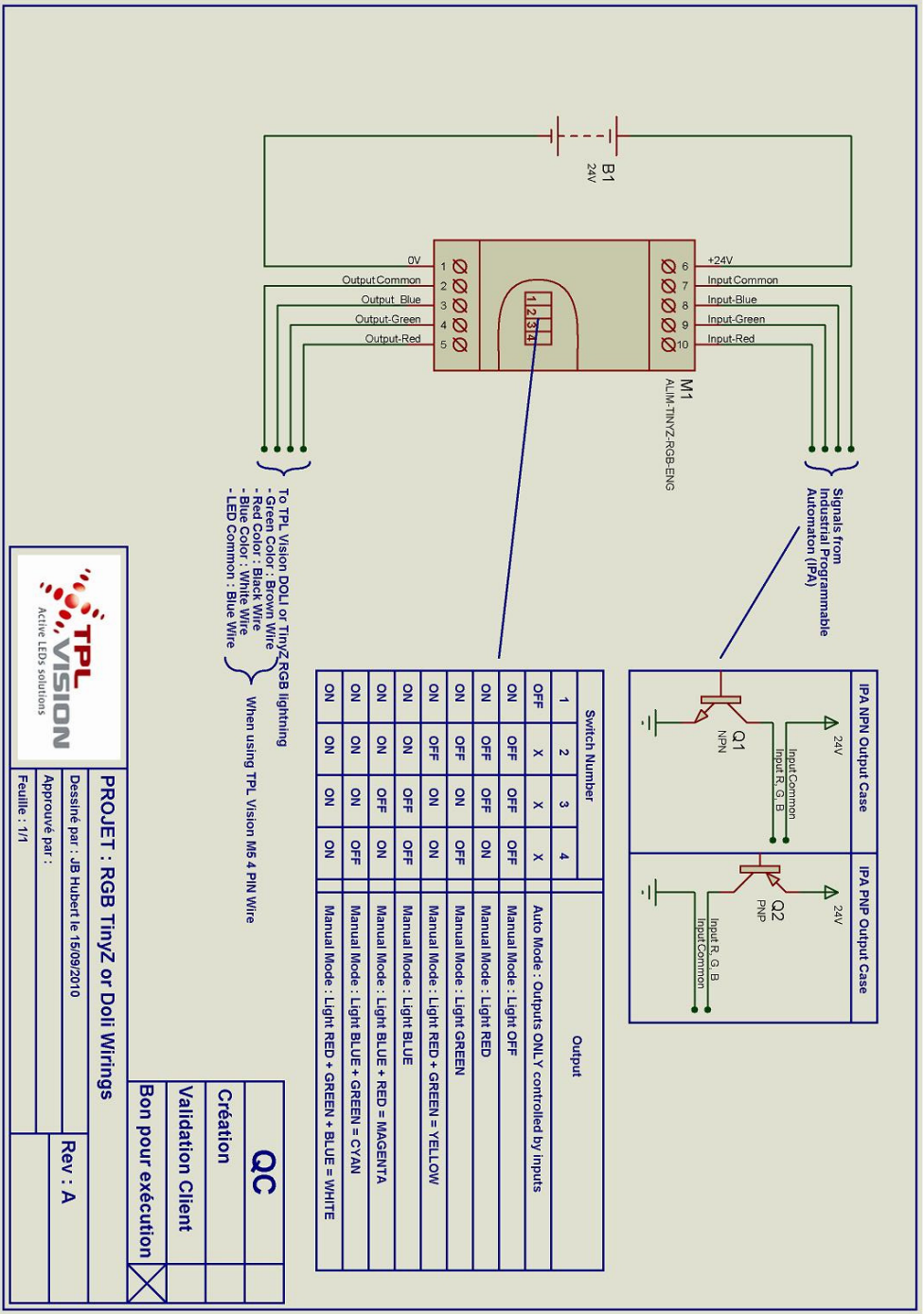
Use a soft, dry cloth.
Do not use solvents or chemicals.
Do not use abrasive cleaning products.